# BPK280
# Spare parts catalogue

Duun Industrier as
7630 Åsen, Norway
www.duun.no

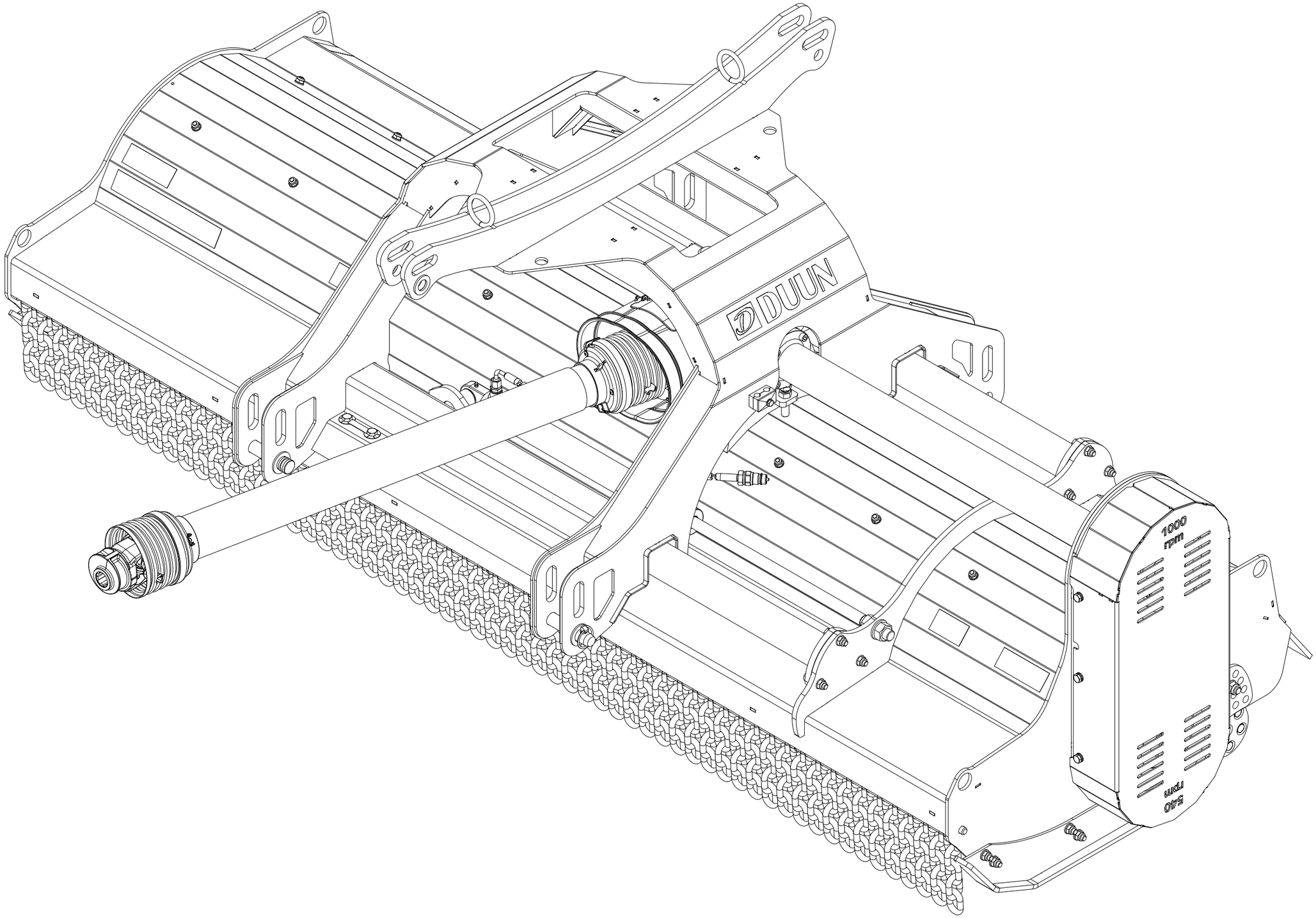

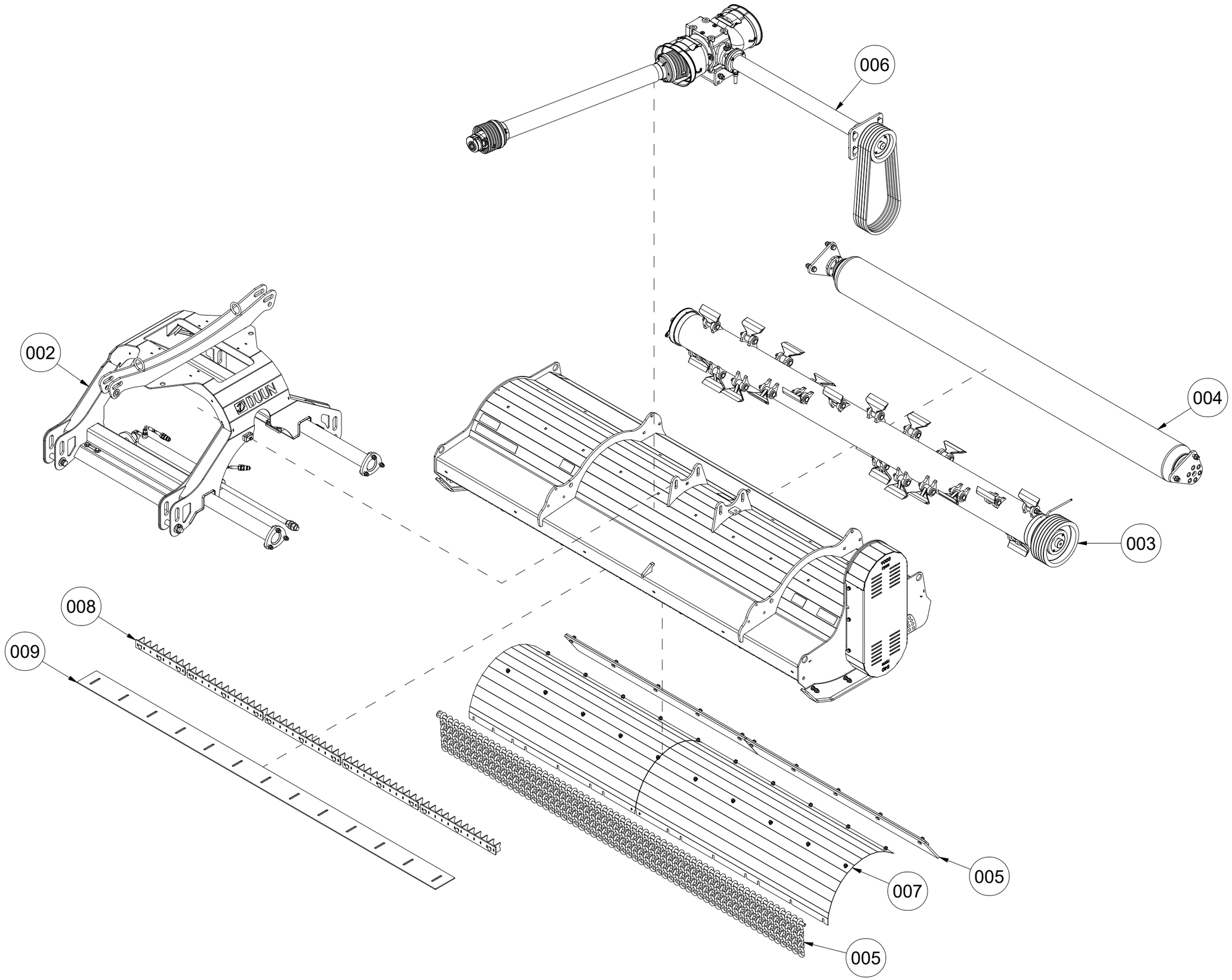
006
002
004
003
008
009
005
007
005

# 001 Hull BPK280

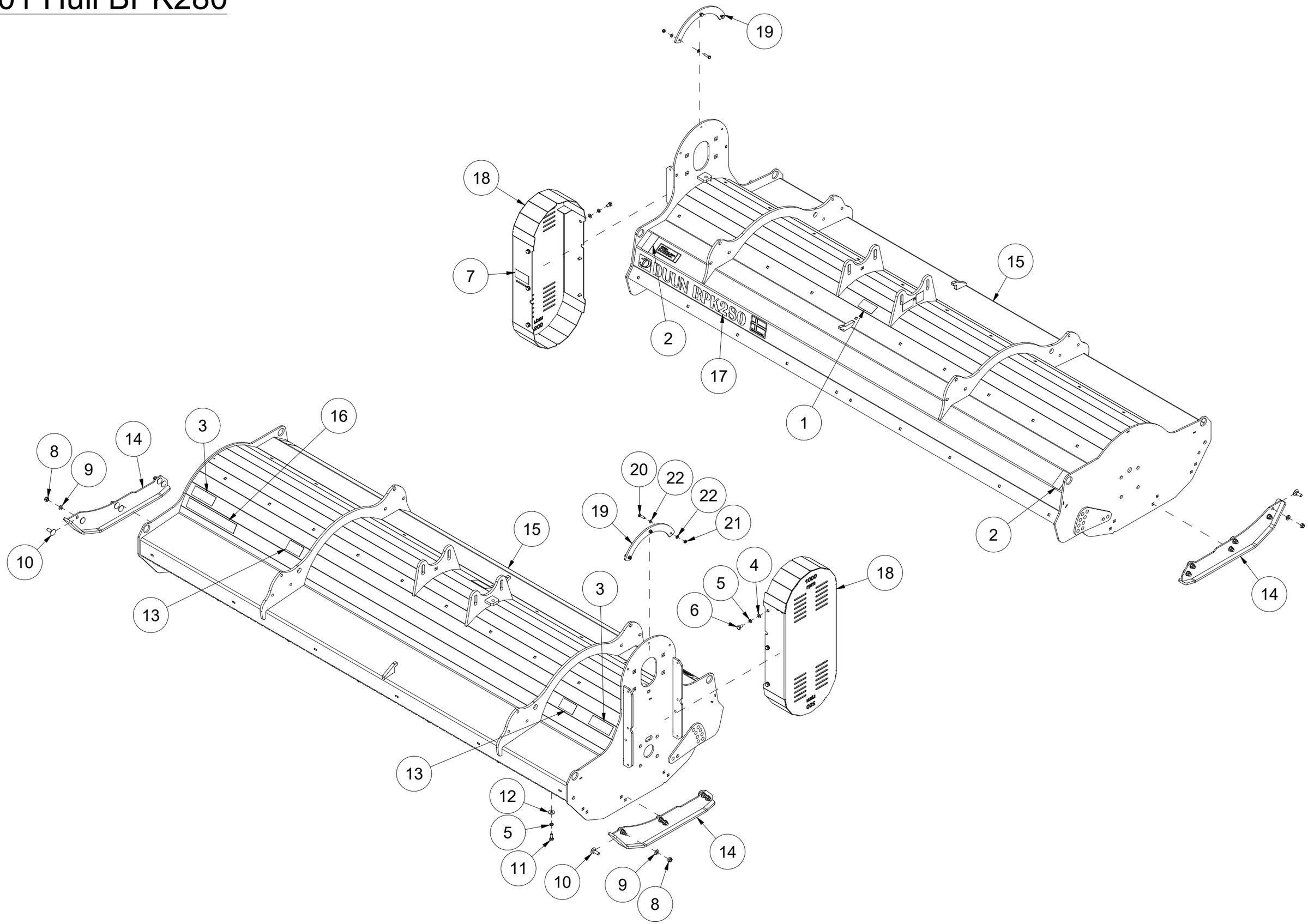

| Pos | Qty | Article no | Designation |
|---|---|---|---|
| 1 | 1 | 2935185 | Adhesive label 90x48 Crush hazard |
| 2 | 2 | 2935186 | Adhesive label 48x90 Keep distance |
| 3 | 2 | 2935188 | Adhesive label 135x48 Cut hazard |
| 4 | 6 | 2531060 | Washer M10 ElZn DIN 125 |
| 5 | 19 | 2534060 | Spring washer M10 ElZn DIN 127 |
| 6 | 6 | 2422295 | Hexagon screw M10x20 ElZn 8.8 DIN 933 |
| 7 | 1 | 2935189 | Adhesive label 90x48 Belt tensioning |
| 8 | 12 | 2483611 | Locking nut M12 ElZn DIN 985 |
| 9 | 12 | 2531069 | Washer M12 ElZn DIN 125 |
| 10 | 12 | 2344350 | Locking screw M12x35 ElZn 8.8 DIN 603 |
| 11 | 13 | 2422297 | Hexagon screw M10x25 ElZn 8.8 DIN 933 |
| 12 | 13 | 2533060 | Body washer M10 ElZn DIN 9021 |
| 13 | 2 | 2935088 | Adhesive label 90x48 Crushing hand hazard |
| 14 | 2 | 27201025 | Skid pad |
| 15 | 1 | 27141001 | Hull BPK280 |
| 16 | 1 | 2935122 | Adhesive label 45x309 Mulcher |
| 17 | 1 | 2935183 | Adhesive label BPK280 |
| 18 | 1 | 27131014 | Cover V2 |
| 19 | 1 | 27131015 | Cover plate |
| 20 | 3 | 2422248 | Hexagon screw M8x30 ElZn 8.8 DIN 933 |
| 21 | 3 | 2483609 | Locking nut M8 ElZn DIN 985 |
| 22 | 6 | 2531047 | Washer M8 ElZn DIN 125 |

# 002 Tractor attachment BPK280

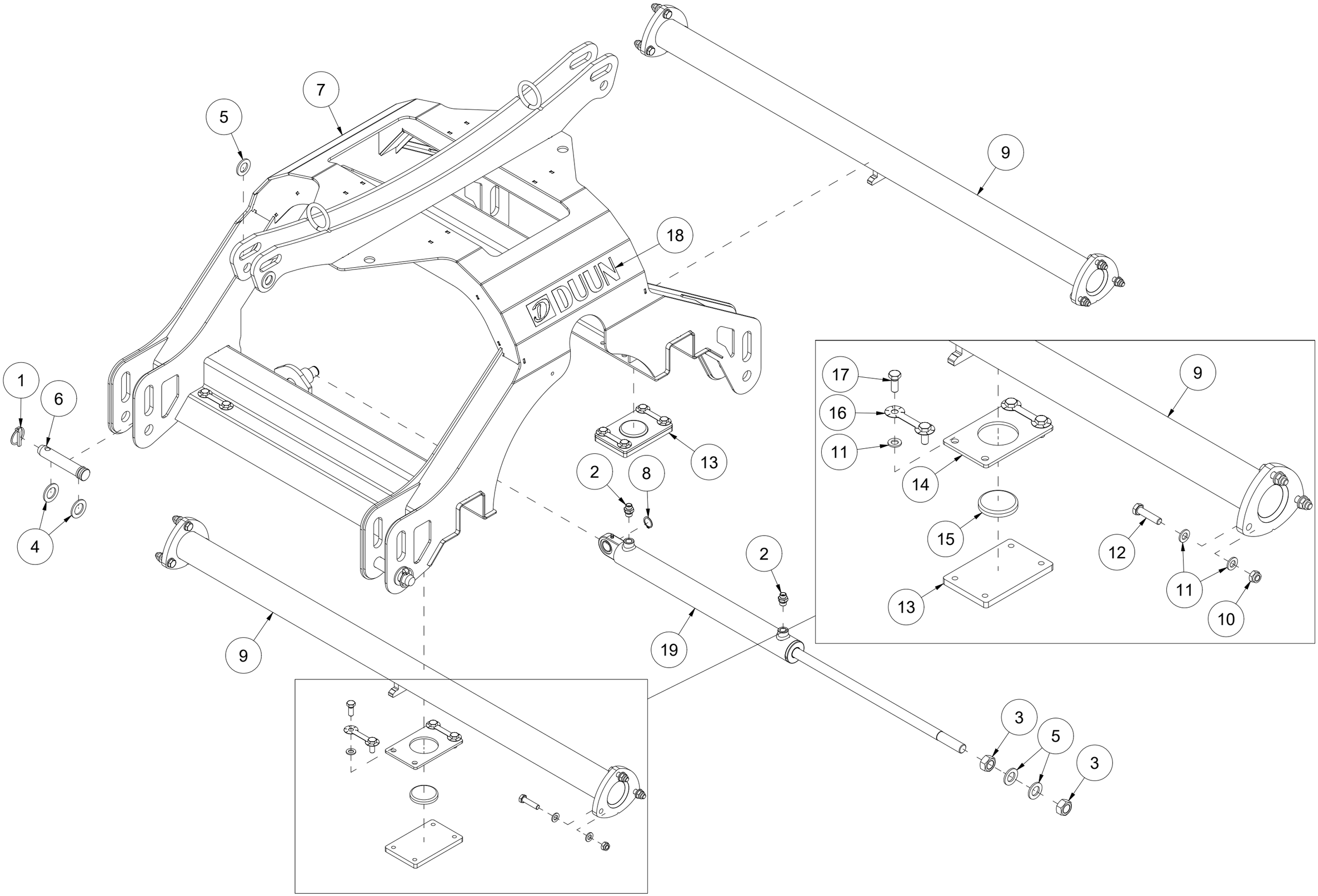

| Pos | Qty | Article no | Designation |
|---|---|---|---|
| 1 | 2 | 2556142 | Linch pin Ø10x40 |
| 2 | 2 | 2957751 | Hexagon nipple GEK BSP 3/8" L10 ED Ø3,0 |
| 3 | 2 | 2482617 | Hexagon nut M24x1.5 ElZn DIN 934 |
| 4 | 4 | 2533097 | Washer Ø30/50x3,5 |
| 5 | 4 | 2533095 | Washer Ø26/45x4 |
| 6 | 2 | 2551731 | Drawbar bolt cat. 2 Ø28x110 |
| 7 | 1 | 27131002 | Tractor attachment, combi |
| 8 | 1 | 2553125 | Seeger ring A 25x1,2 DIN 471 |
| 9 | 2 | 27131003 | Sliding tube |
| 10 | 12 | 2483611 | Locking nut M12 ElZn DIN 985 |
| 11 | 40 | 2531069 | Washer M12 ElZn DIN 125 |
| 12 | 12 | 2422356 | Hexagon screw M12x50 ElZn 8.8 DIN 931 |
| 13 | 4 | 27131004 | Plate |
| 14 | 4 | 27131006 | Plate |
| 15 | 4 | 27131005 | Sliding plate |
| 16 | 8 | 27131011 | Locking plate |
| 17 | 16 | 2422348 | Hexagon screw M12x30 ElZn 8.8 DIN 933 |
| 18 | 2 | 2935071 | Adhesive label Duun H60 |
| 19 | 1 | 2955373 | Cylinder Ø50x25 SL500 |

# 003 Rotor BPK280

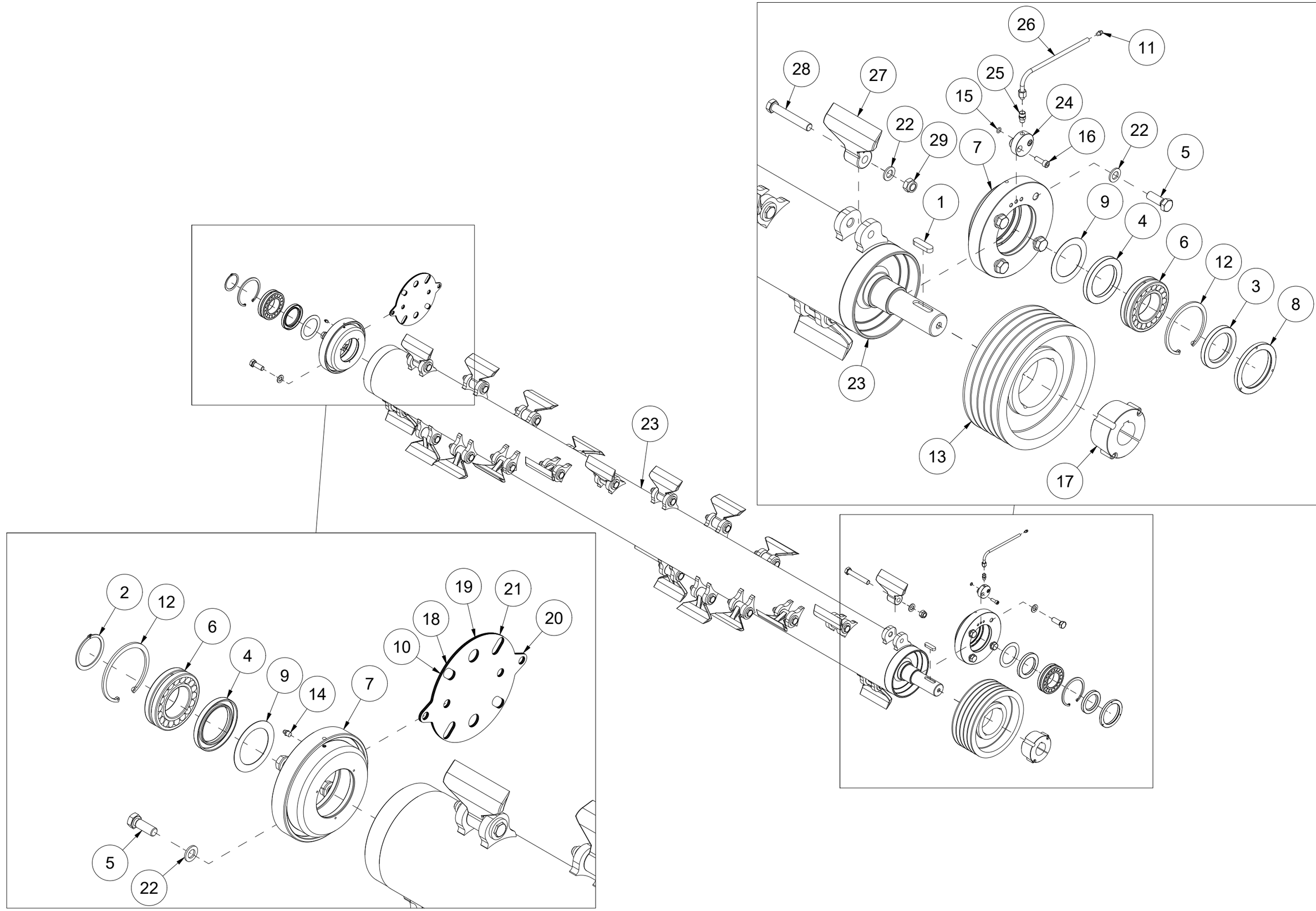

| Pos | Qty | Article no | Designation |
|---|---|---|---|
| 1 | 1 | 2115175 | Cotter 14x9 L50 St DIN 6885A |
| 2 | 1 | 2553160 | Seeger ring A 60x2,0 DIN 471 |
| 3 | 1 | 2234157 | Simmerring Ø60/90x10 |
| 4 | 2 | 2234161 | Simmerring Ø70/100x10 AS |
| 5 | 8 | 2423491 | Hexagon screw M16x45 ElZn 10.9 DIN 933 |
| 6 | 2 | 2953322 | Roller bearing 22212.EAW33C3 Ø60/110x28 |
| 7 | 2 | 27121014 | Bearing |
| 8 | 1 | 27121015 | Ring |
| 9 | 2 | 27101043 | Washer holder |
| 10 | 1 | 27121017 | Shims rotor 3 mm |
| 11 | 1 | 2478409 | Grease nipple, Straight M6 |
| 12 | 2 | 2553310 | Seeger ring I 110x4,0 DIN 472 |
| 13 | 1 | 2965390 | Pulley 265x5 SPB 3020 |
| 14 | 1 | 2478407 | Grease nipple, Straight M8 |
| 15 | 1 | 2233008 | O-ring 8,00x2,00 NBR 70 |
| 16 | 2 | 2472315 | Unbrako cylinder screw M8x25 ElZn DIN 912 |
| 17 | 1 | 2965321 | Bushing Ø50 TL3020 |
| 18 | 1 | 27121031 | Shims rotor 2 mm |
| 19 | 1 | 27121034 | Shims rotor 1 mm |
| 20 | 1 | 27121070 | Shims rotor 5 mm |
| 21 | 1 | 27121069 | Shims rotor 4 mm |
| 22 | 32 | 2531078 | Washer M16 ElZn DIN 125 |
| 23 | 1 | 27111002 | Rotor BP280 |
| 24 | 1 | 27201089 | Lubricating adapter attachment |
| 25 | 1 | 2957752 | Hexagon nipple BSP 1/8-GE08LLR, Nut, DPR |
| 26 | 1 | 27121072 | Lubrication tube BPK |
| 27 | 24 | 2112210 | Hammer knife |
| 28 | 24 | 2428502 | Hexagon screw M16x1,5x100 ElZn 10.9 DIN 960 |
| 29 | 24 | 2482613 | Locking nut M16x1,5 ElZn DIN 985 |

# 004 Roller BPK280

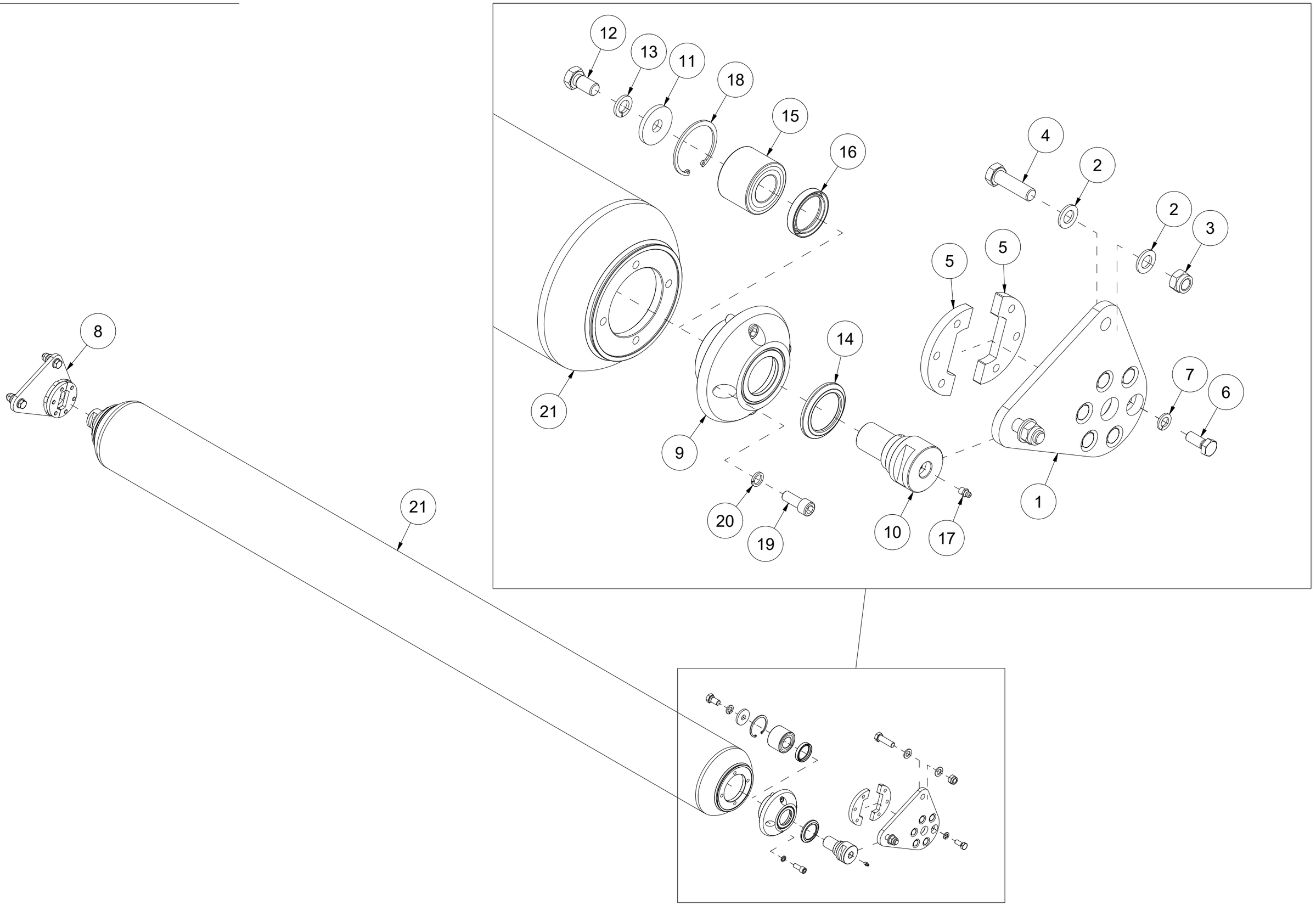

| Pos | Qty | Article no | Designation |
|---|---|---|---|
| 1 | 1 | 27121013 | Left side bracket |
| 2 | 8 | 2531078 | Washer M16 ElZn DIN 125 |
| 3 | 4 | 2483613 | Locking nut M16 ElZn DIN 985 |
| 4 | 4 | 2422494 | Hexagon screw M16x55 ElZn 8.8 DIN 931 |
| 5 | 4 | 27121054 | Fastening bracket |
| 6 | 12 | 2422348 | Hexagon screw M12x30 ElZn 8.8 DIN 933 |
| 7 | 12 | 2534069 | Spring washer M12 ElZn DIN 127 |
| 8 | 1 | 27121018 | Right side bracket |
| 9 | 2 | 27121052 | Bearing |
| 10 | 2 | 27121053 | Shaft |
| 11 | 2 | 27121057 | Washer Ø16/50x6 |
| 12 | 2 | 2422485 | Hexagon screw M16x30 ElZn 8.8 DIN 933 |
| 13 | 2 | 2534078 | Spring washer M16 ElZn DIN 127 |
| 14 | 2 | 2232350 | Sealing Ø50x72x5,5 9RB |
| 15 | 2 | 2953323 | Bearing Ø35/68x48 |
| 16 | 2 | 2234151 | Simmerring Ø45/60x10 |
| 17 | 2 | 2478407 | Grease nipple, Straight M8 |
| 18 | 2 | 2553268 | Seeger ring I 68x2,5 DIN 472 |
| 19 | 8 | 2477348 | Unbrako cylinder screw M12x30 ElZn DIN 912 |
| 20 | 8 | 2534070 | Spring washer M12 ElZn DIN 7980 |
| 21 | 1 | 27111003 | Roller BP280 |

# 005 Protection chain BPK280

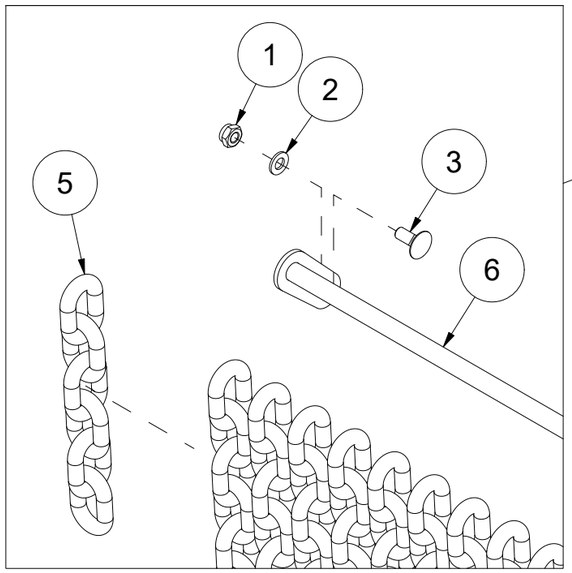


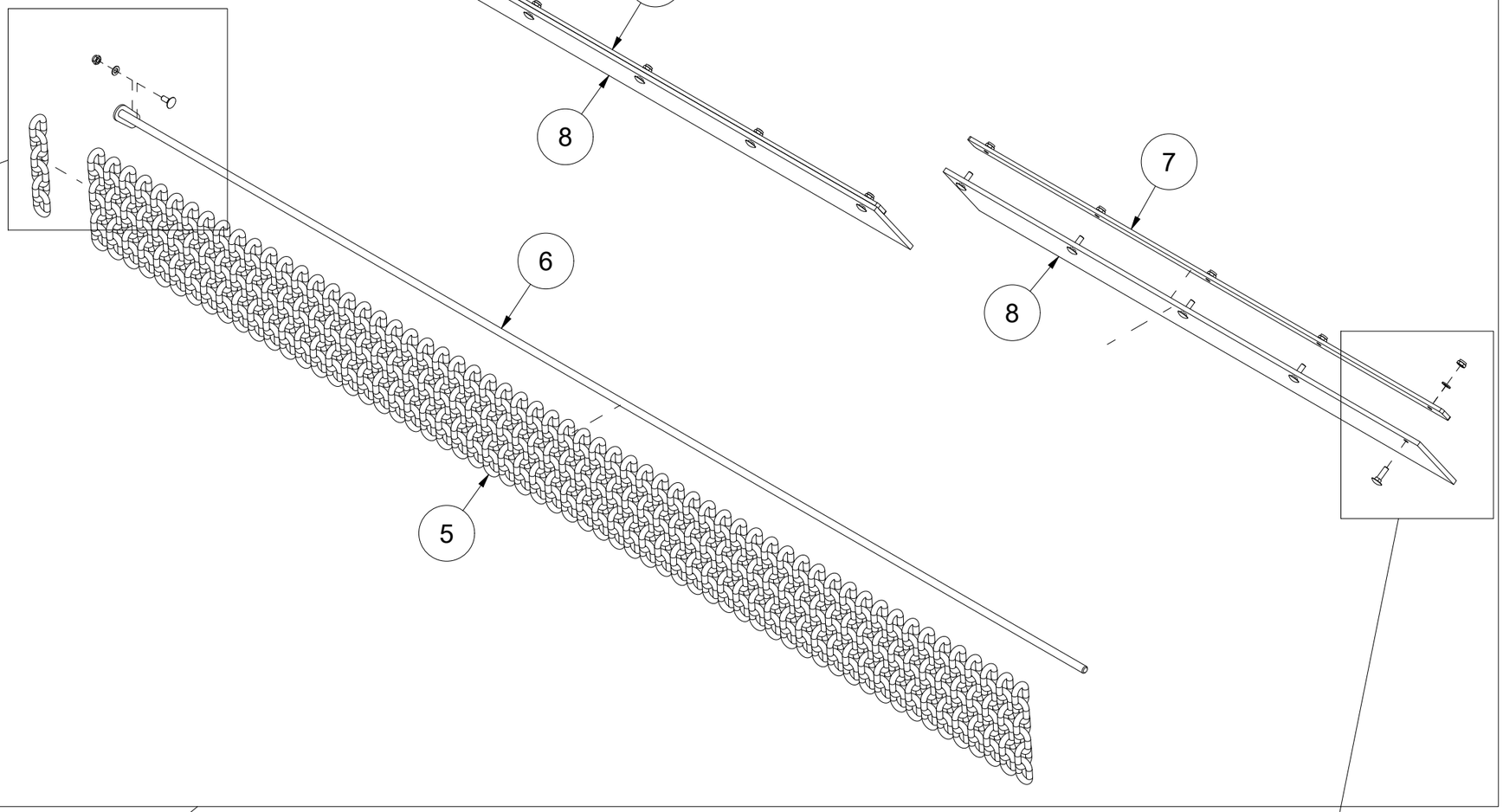





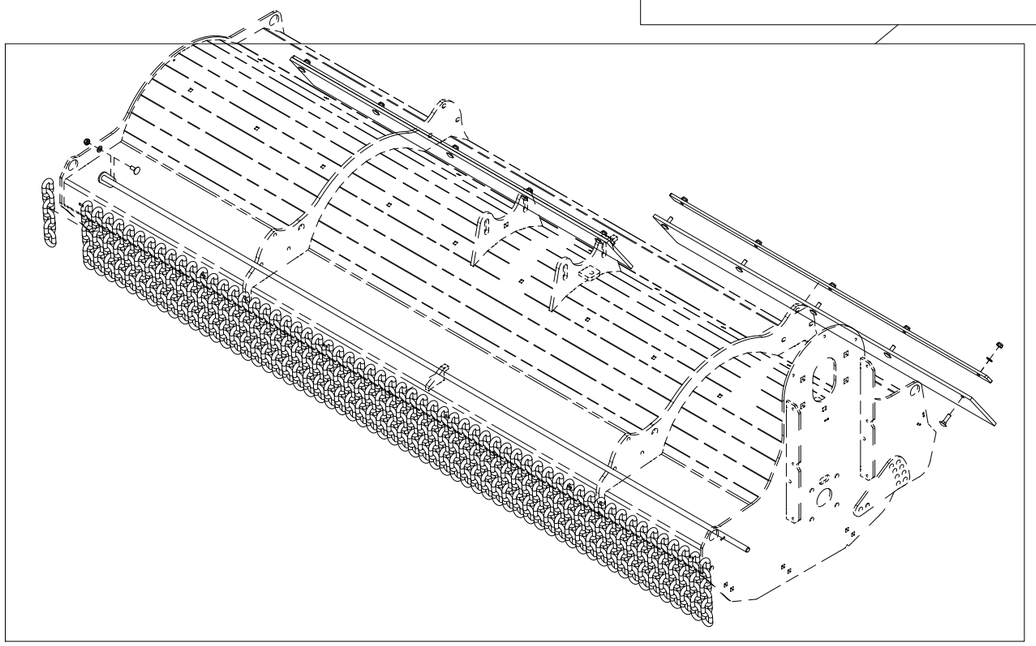

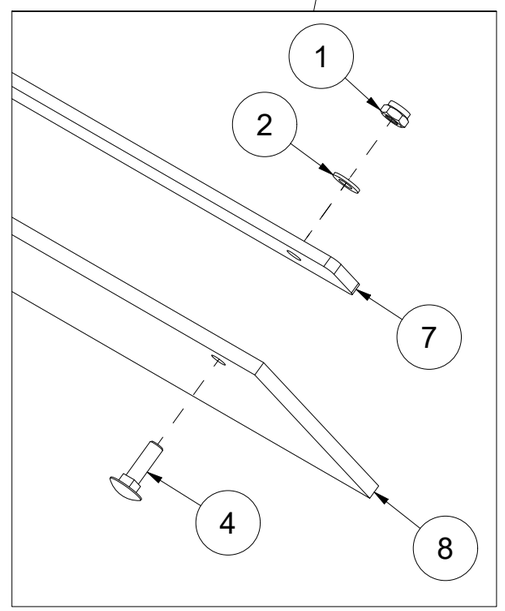

| Pos | Qty | Article no | Designation |
|---|---|---|---|
| 1 | 11 | 2483610 | Locking nut M10 ElZn DIN 985 |
| 2 | 11 | 2531060 | Washer M10 ElZn DIN 125 |
| 3 | 1 | 2344330 | Locking screw M10x25 ElZn 8.8 DIN 603 |
| 4 | 10 | 2344332 | Locking screw M10x35 ElZn 8.8 DIN 603 |
| 5 | 61 | 2555015 | 6 link chain |
| 6 | 1 | 27111004 | Rod BP280 |
| 7 | 2 | 27111006 | Attachment rail |
| 8 | 2 | 27111008 | Rubber plate |

# 006 Gearbox BPK280

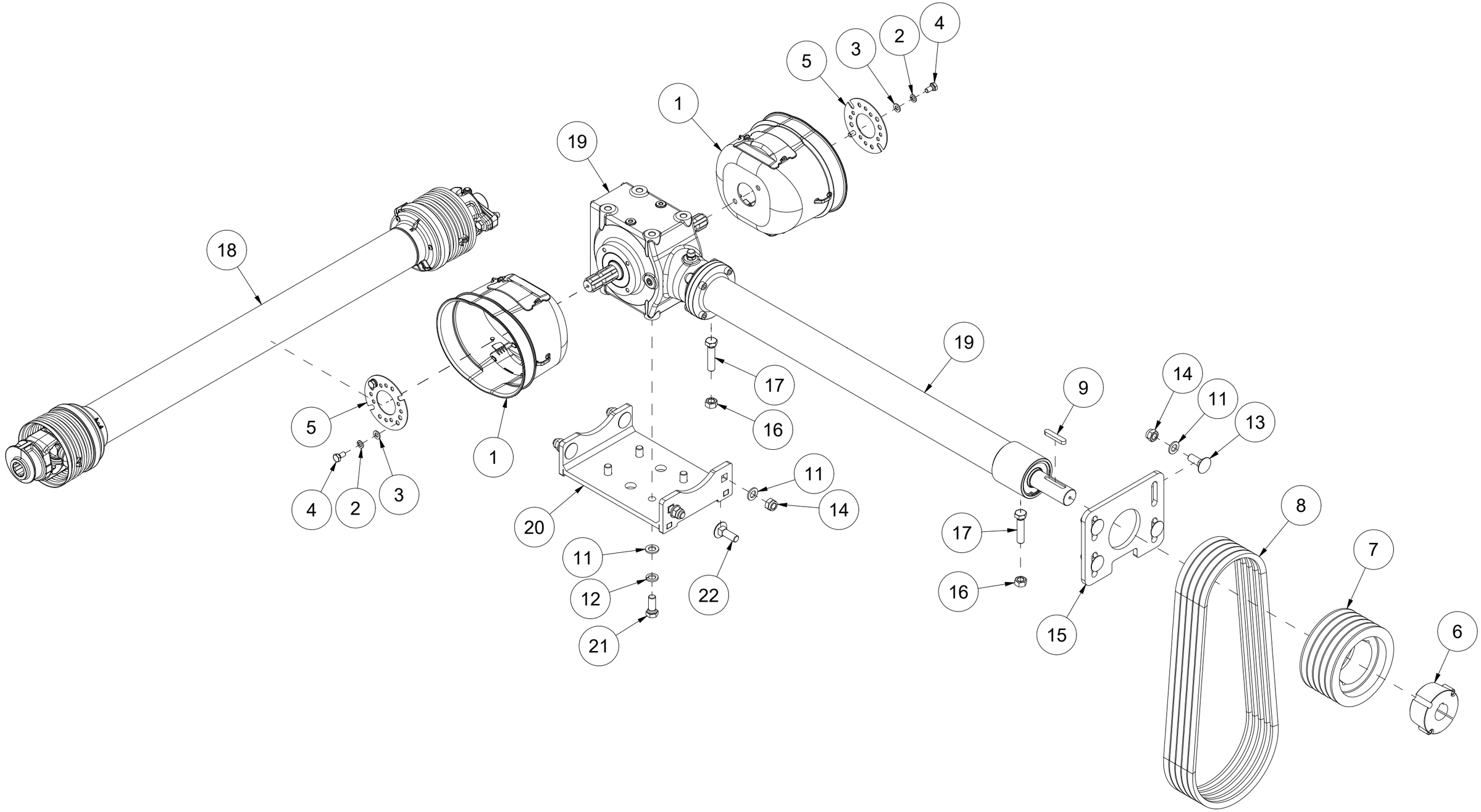

| Pos | Qty | Article no | Designation |
|---|---|---|---|
| 1 | 2 | 27101027 | Safety funnel |
| 2 | 4 | 2534060 | Spring washer M10 ElZn DIN 127 |
| 3 | 4 | 2531060 | Washer M10 ElZn DIN 125 |
| 4 | 4 | 2422295 | Hexagon screw M10x20 ElZn 8.8 DIN 933 |
| 5 | 2 | 31231079 | Fastening plate for protective funnel |
| 6 | 1 | 2965320 | Bushing Ø40 TL3020 |
| 7 | 1 | 2965385 | Pulley 190x5 SPB 3020 |
| 8 | 5 | 2965230 | V-belts XPB L1600 |
| 9 | 1 | 2115164 | Cotter 12x8 L63 St DIN 6885A |
| 10 | 1 | 27121008 | Gear oil |
| 11 | 12 | 2531078 | Washer M16 ElZn DIN 125 |
| 12 | 4 | 2534078 | Spring washer M16 ElZn DIN 127 |
| 13 | 4 | 2344491 | Locking screw M16x45 ElZn 8.8 DIN 603 |
| 14 | 8 | 2483613 | Locking nut M16 ElZn DIN 985 |
| 15 | 1 | 27121028 | Bracket |
| 16 | 2 | 2481613 | Hexagon nut M16 ElZn DIN 934 |
| 17 | 2 | 2425498 | Hexagon screw M16x70 ElZn 8.8 DIN 933 |
| 18 | 1 | 2962166 | Power transmission shaft 3/8" L1210 |
| 19 | 1 | 2961137 | Gearbox 1:2,58 2x90° with extension L1040 |
| 20 | 1 | 27131010 | Bracket |
| 21 | 4 | 2422489 | Hexagon screw M16x40 ElZn 8.8 DIN 933 |
| 22 | 4 | 2344493 | Locking screw M16x50 ElZn 8.8 DIN 603 |

# 007 Protective cover BPK280

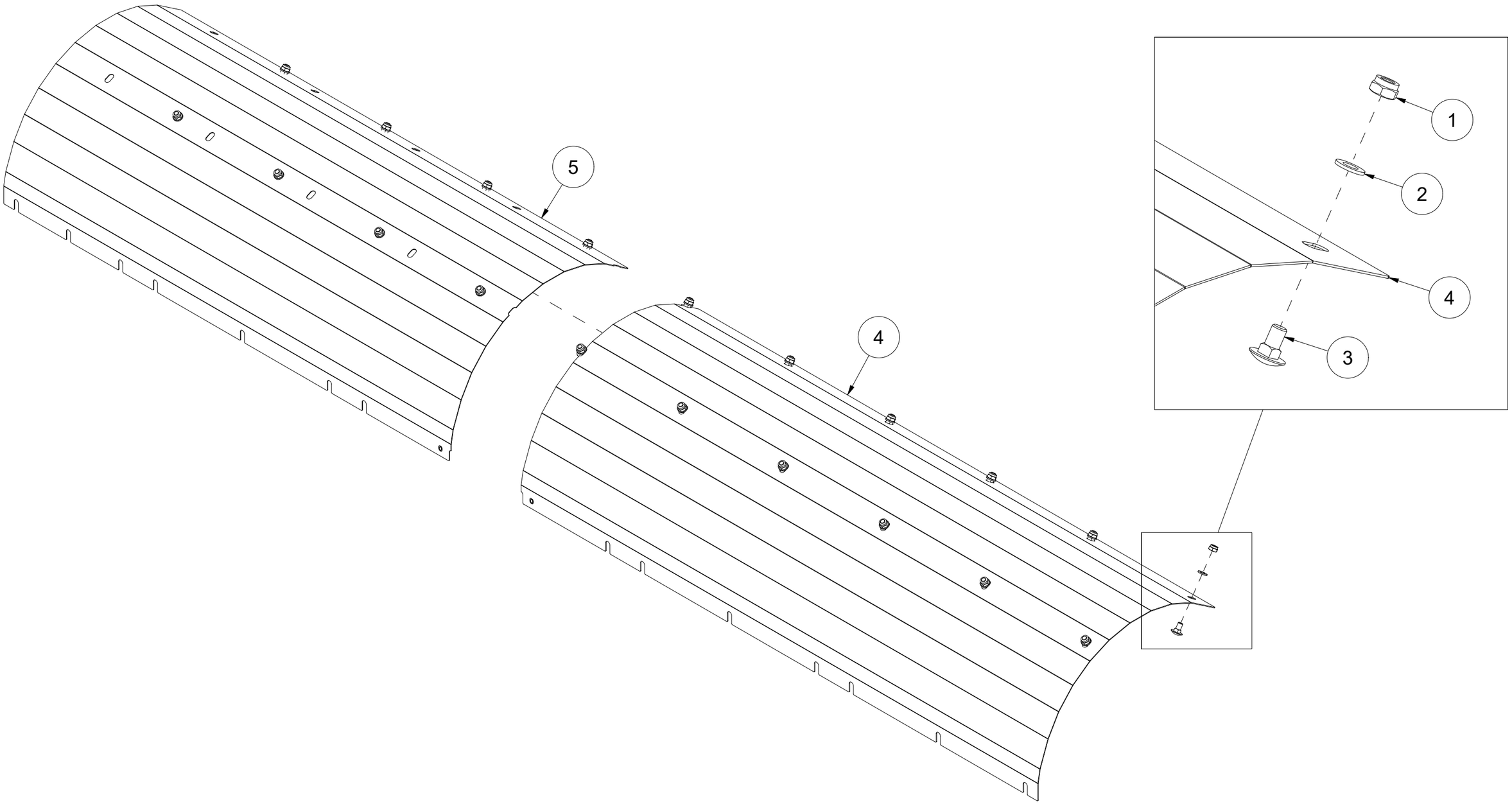

| Pos | Qty | Article no | Designation |
|---|---|---|---|
| 1 | 20 | 2483610 | Locking nut M10 ElZn DIN 985 |
| 2 | 20 | 2531060 | Washer M10 ElZn DIN 125 |
| 3 | 20 | 2344295 | Locking screw M10x20 ElZn 8.8 DIN 603 |
| 4 | 1 | 27131007 | Left side wear cover |
| 5 | 1 | 27141005 | Right side wear cover |

# 008 Counter knives BPK280

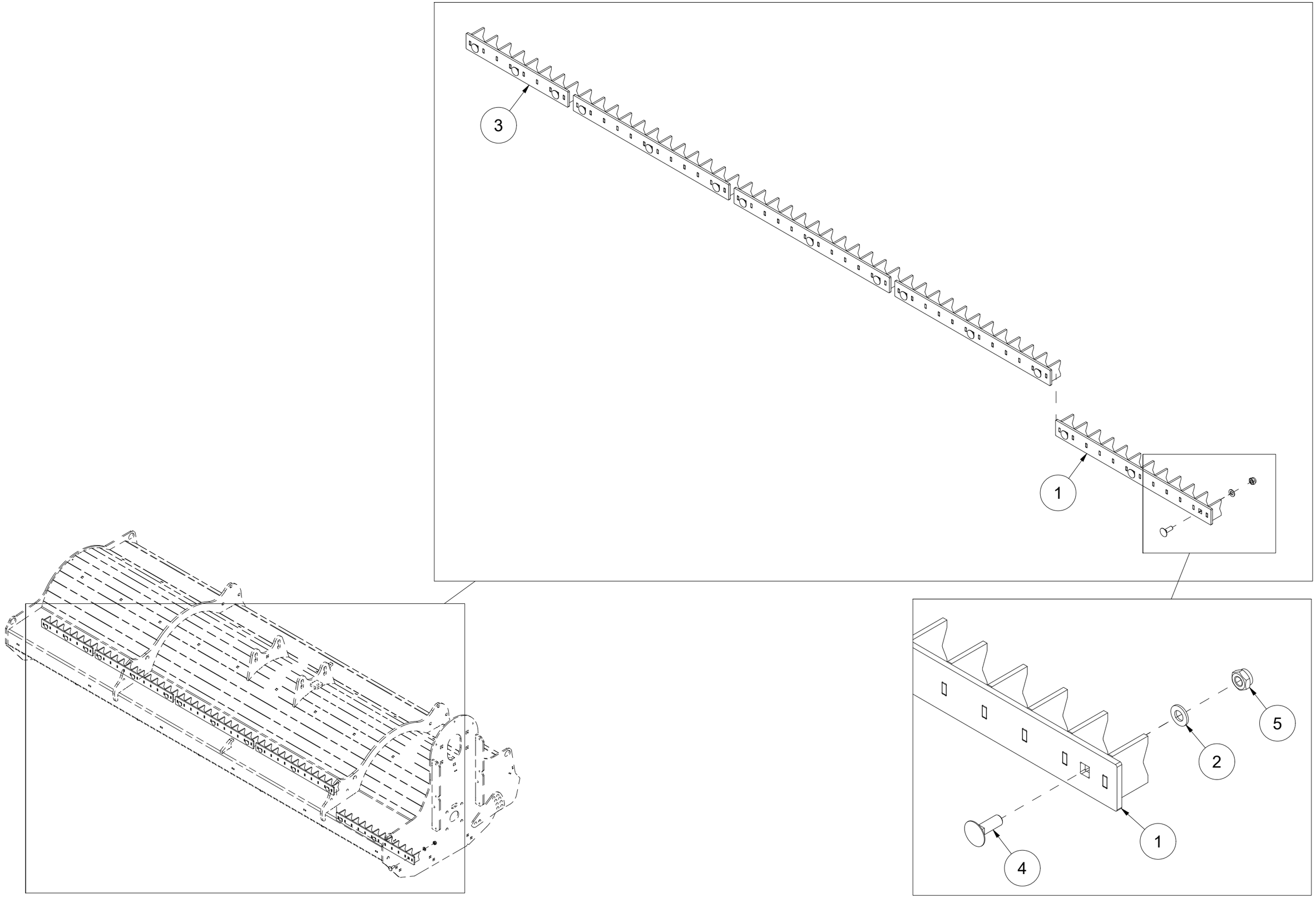

| Pos | Qty | Article no | Designation |
|---|---|---|---|
| 1 | 4 | 27121058 | Knife |
| 2 | 15 | 2531060 | Washer M10 ElZn DIN 125 |
| 3 | 1 | 27101061 | Knife |
| 4 | 15 | 2344331 | Locking screw M10x30 ElZn 8.8 DIN 603 |
| 5 | 15 | 2483610 | Locking nut M10 ElZn DIN 985 |

# 009 Cutting rail BPK280

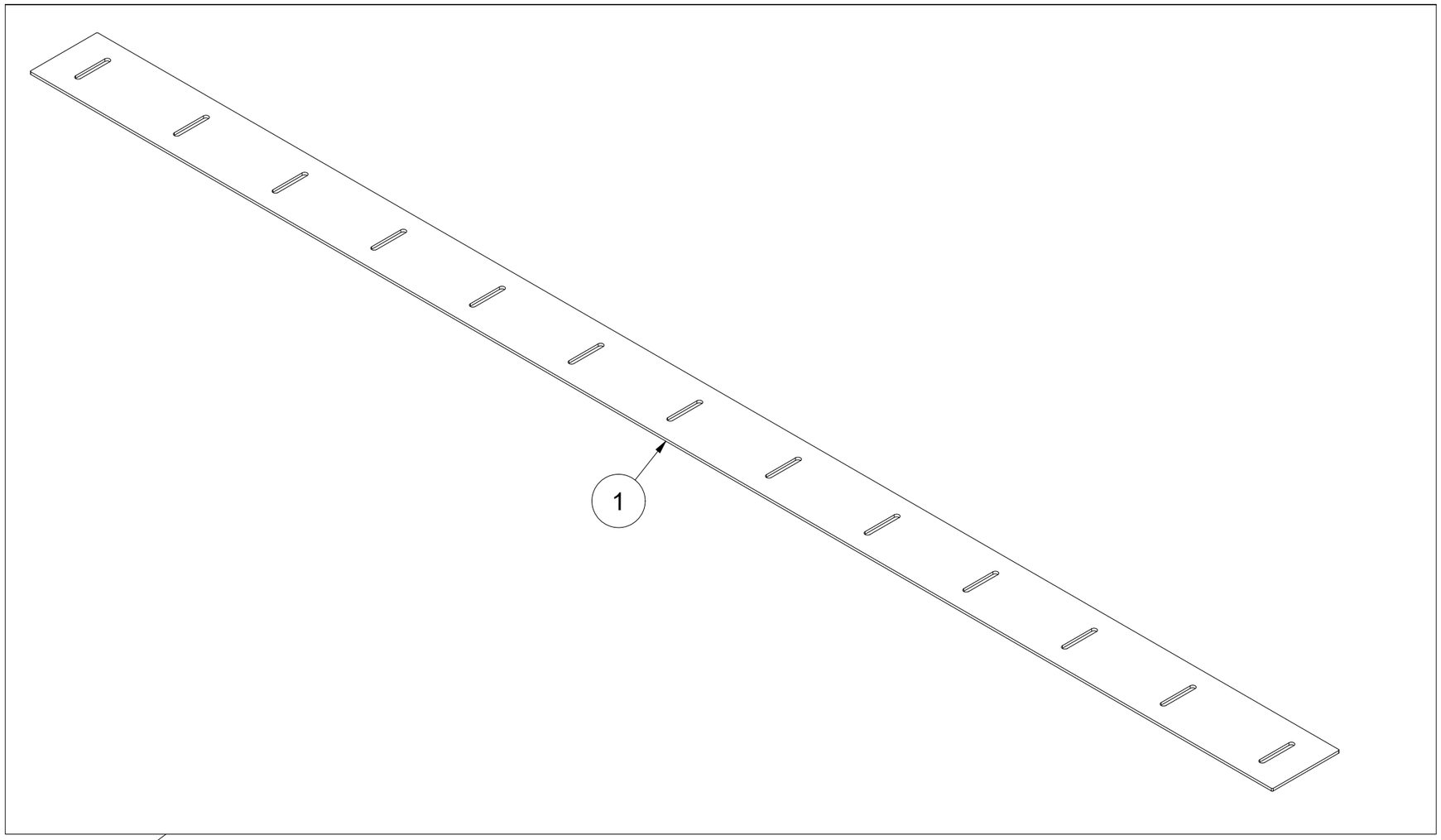


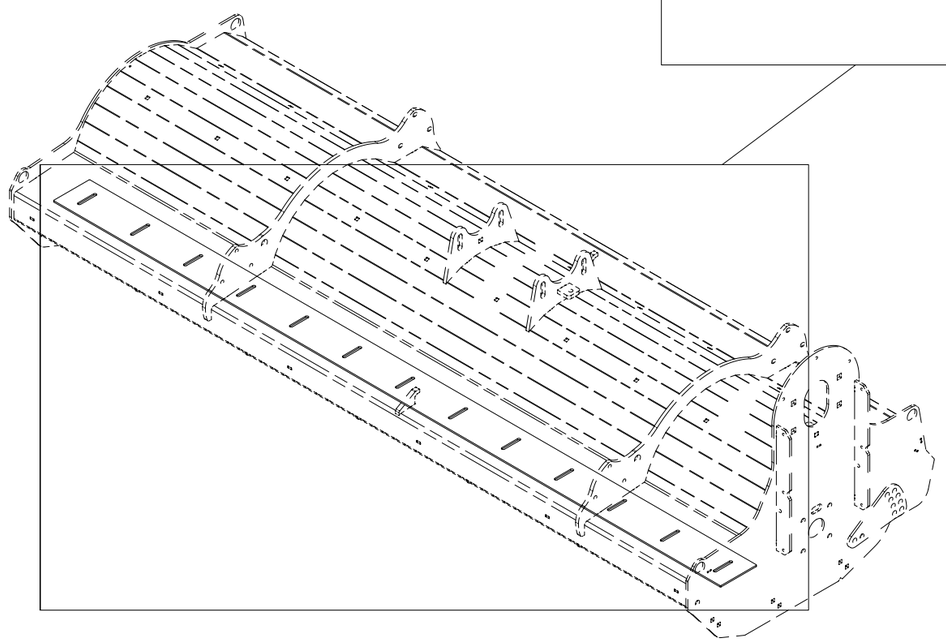

| Pos | Qty | Article no | Designation |
|---|---|---|---|
| 1 | 1 | 27111016 | Cutting rail |

# 010 Hydraulic hoses BPK280

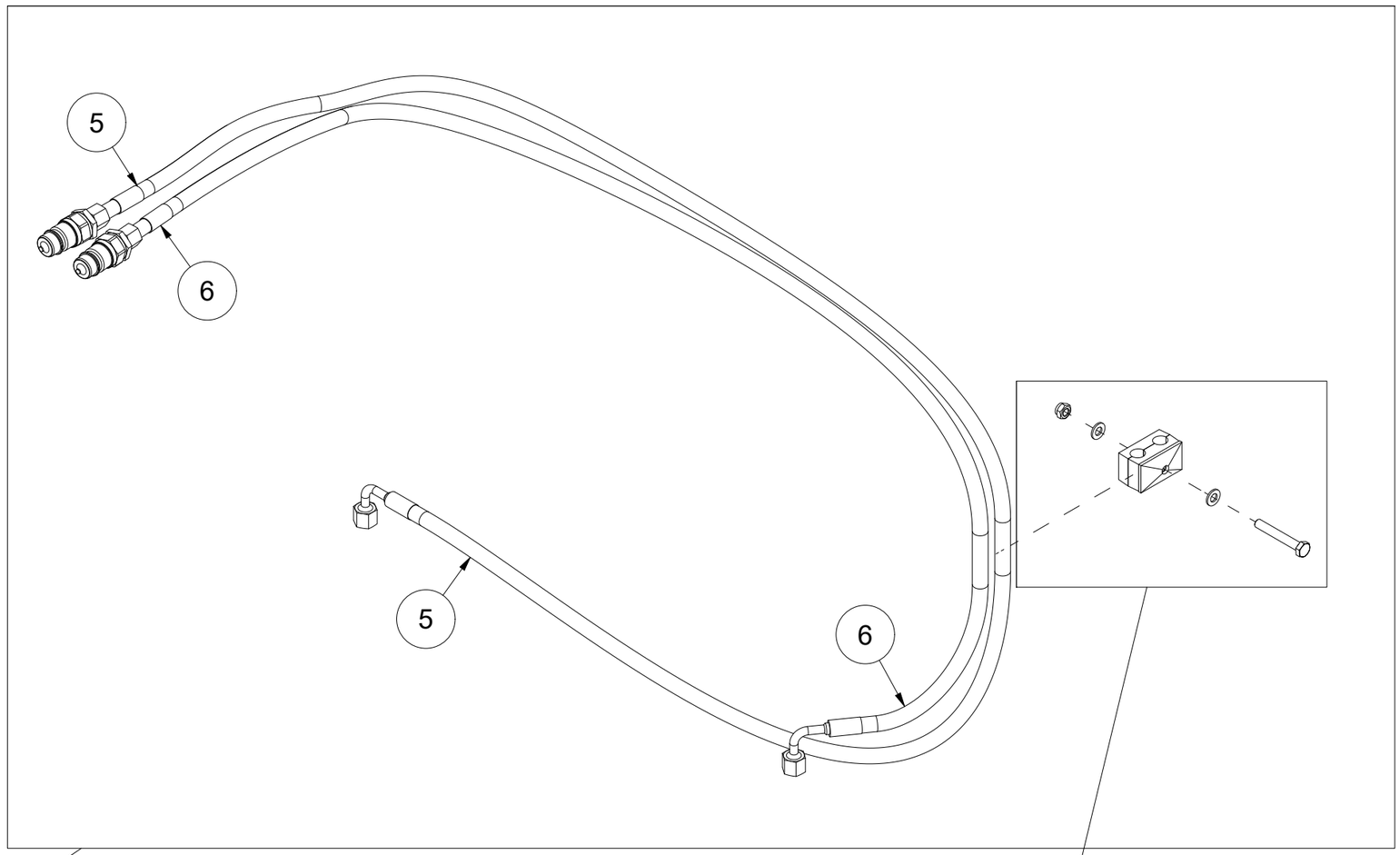


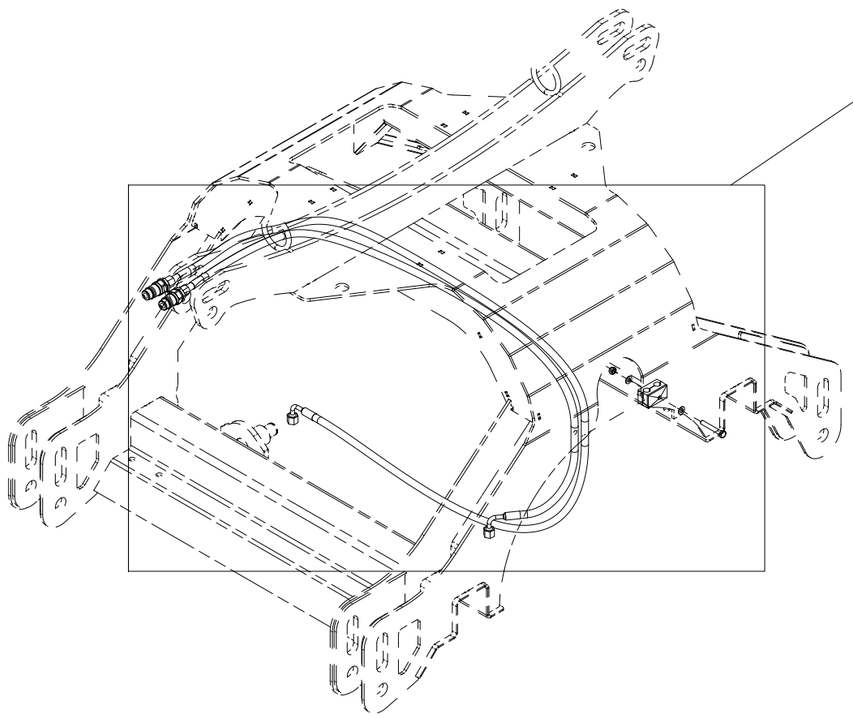

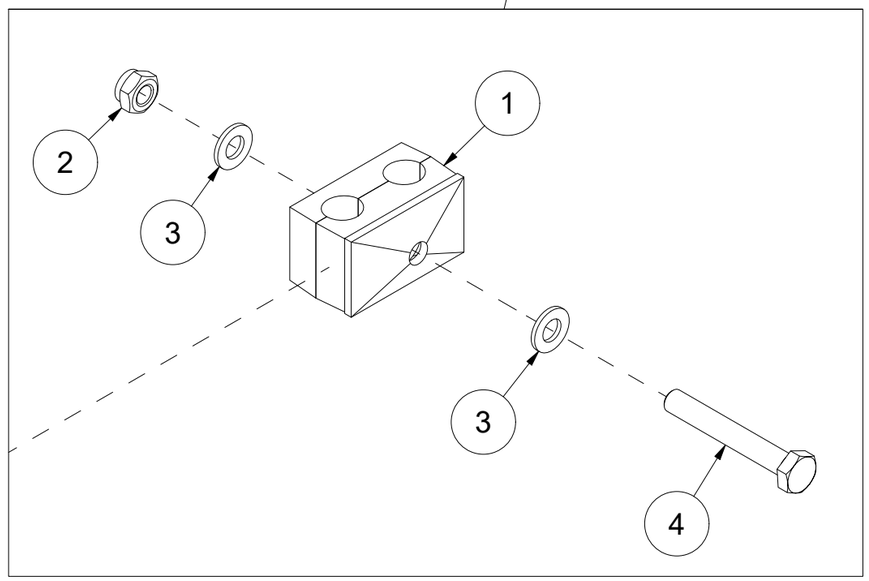

| Pos | Qty | Article no | Designation |
|---|---|---|---|
| 1 | 1 | 4251206 | Hose holder |
| 2 | 1 | 2483809 | Locking nut M8 A4 DIN 985 |
| 3 | 2 | 2531047 | Washer M8 ElZn DIN 125 |
| 4 | 1 | 2422258 | Hexagon screw M8x55 ElZn 8.8 DIN 931 |
| 5 | 1 | 2958404 | Hydraulic hose 1/4" L3100 |
| 6 | 1 | 2958403 | Hydraulic hose 1/4" L2560 |